Round 4 - Sunday, March 8, 2026

SHOTLINK

Astara Chile Classic presented by Scotiabank

Prince of Wales Country Club

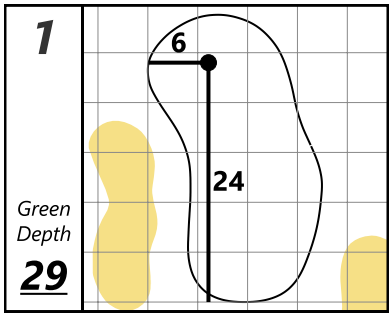

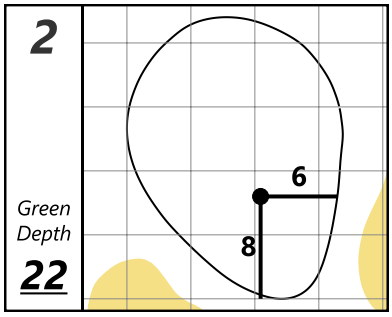

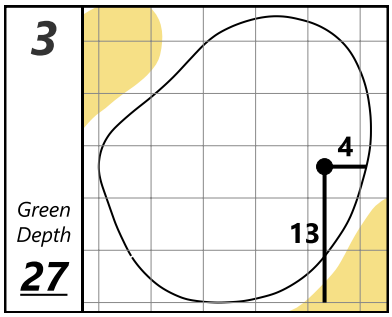

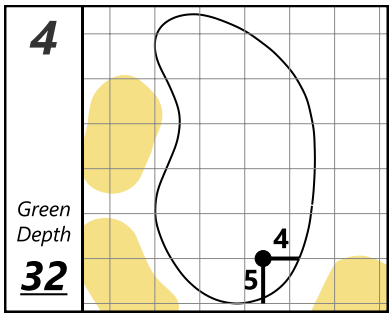

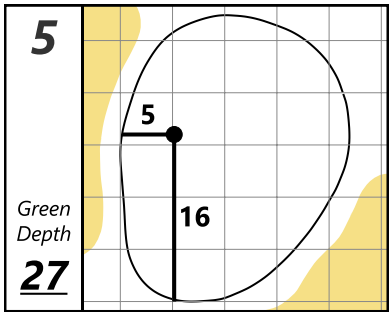

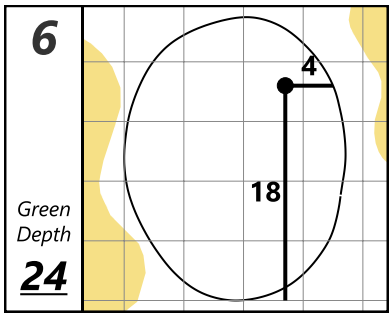

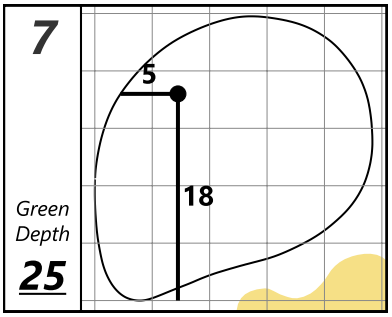

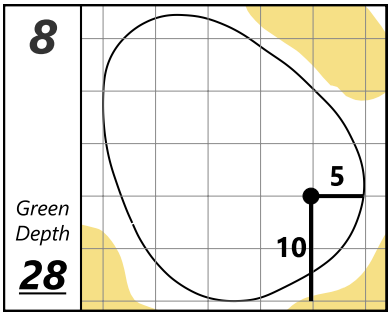

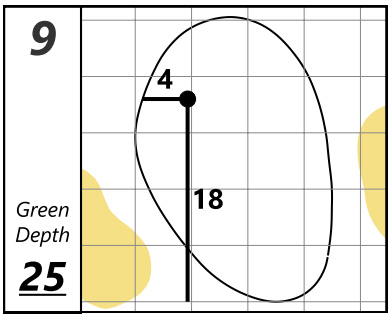

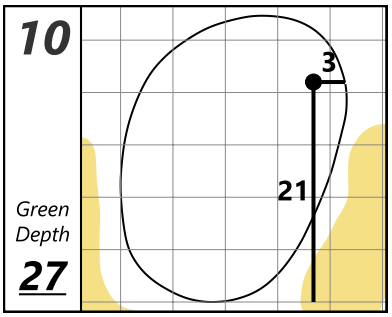

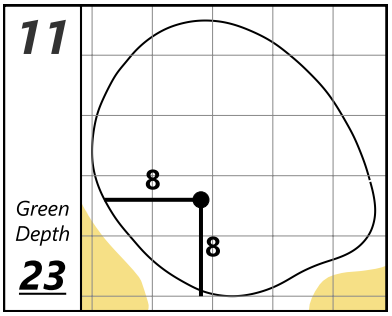

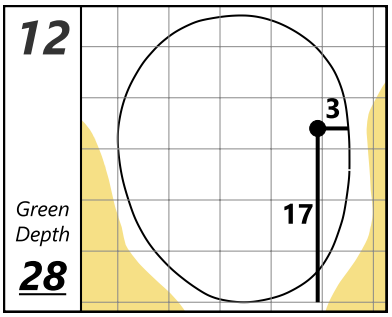

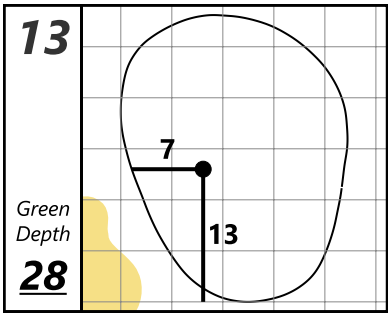

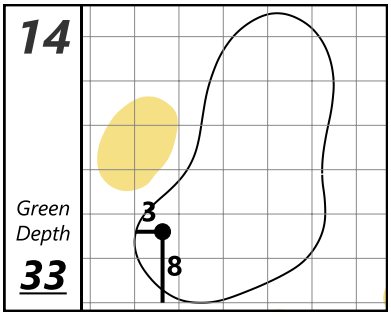

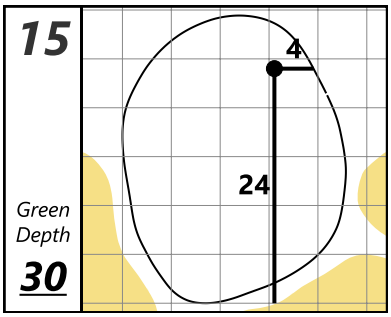

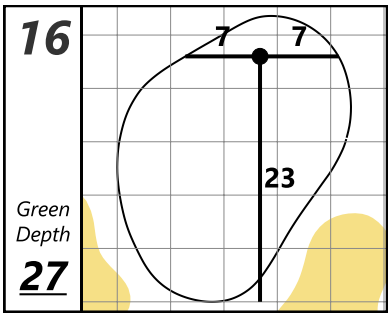

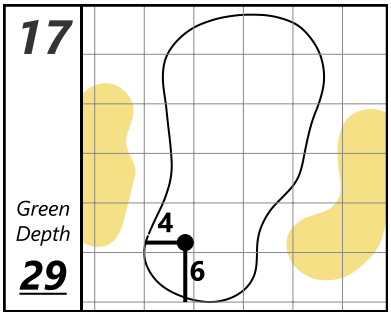

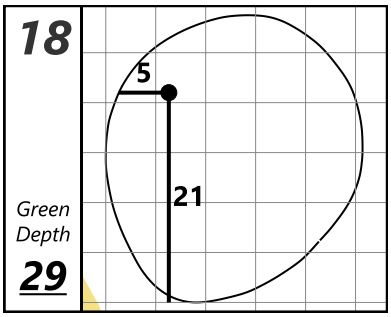

Each side of a complete square on the green represents 5 YARDS

Saturday, March 7, 2026 12:25 PM