Round 4 - Sunday, March 9, 2025

SHOTLINK

Puerto Rico Open

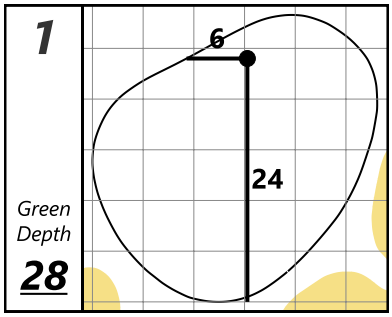

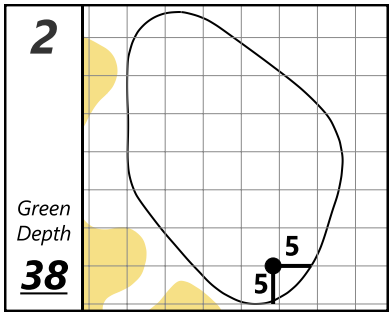

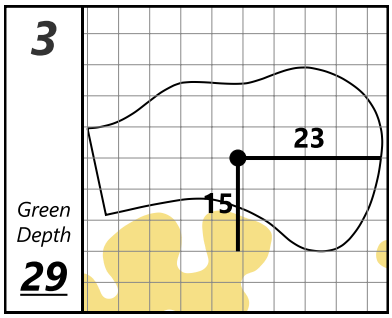

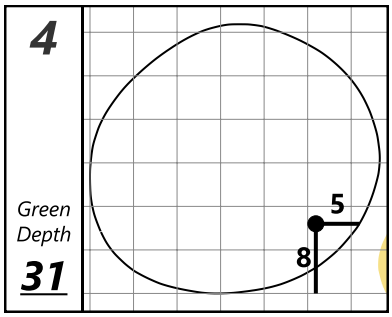

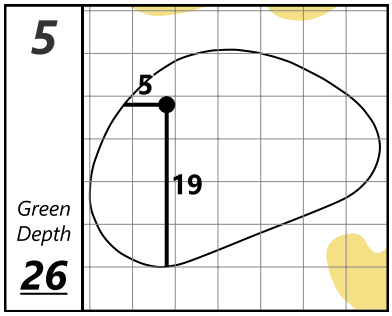

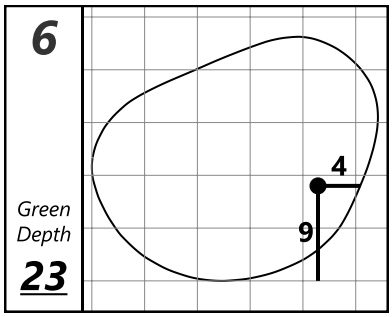

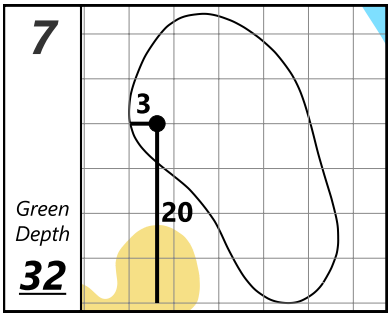

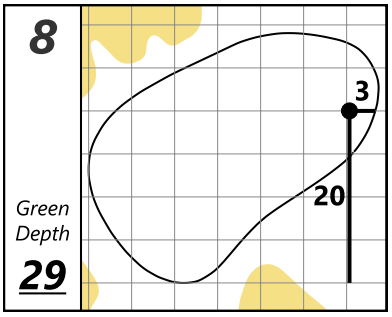

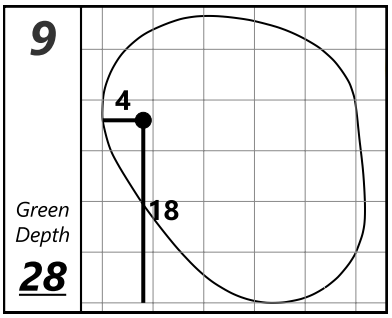

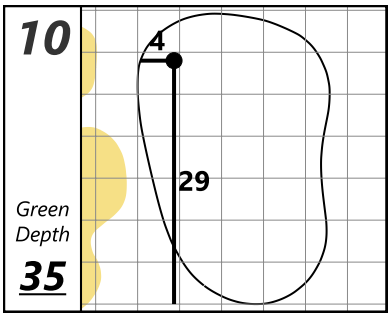

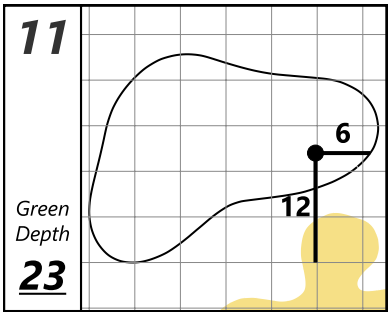

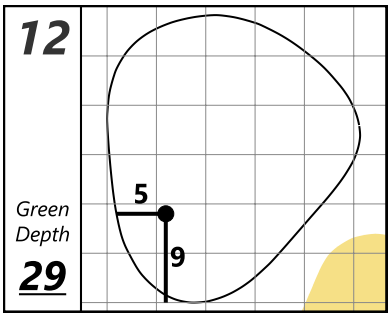

Grand Reserve Golf Club

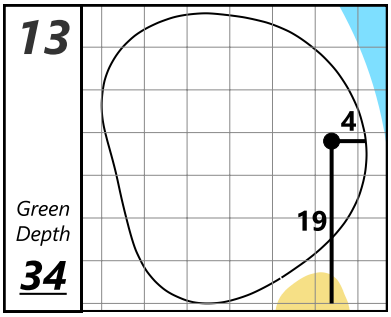

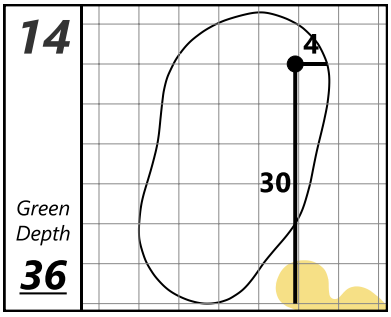

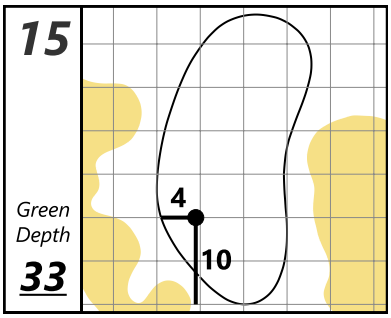

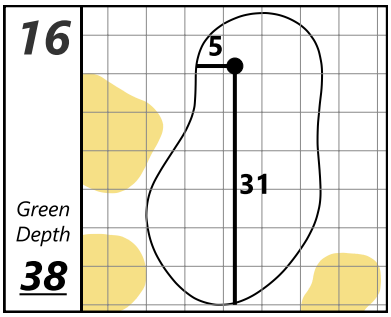

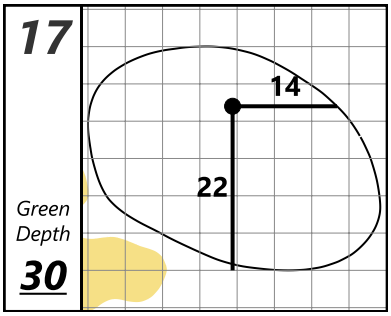

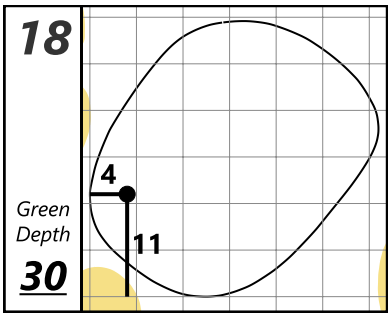

Each side of a complete square on the green represents 5 YARDS

Saturday, March 8, 2025 9:34 AM