Round 1 & 2 - Thursday & Friday, November 21 & 22, 2024

SHOTLINK

The RSM Classic

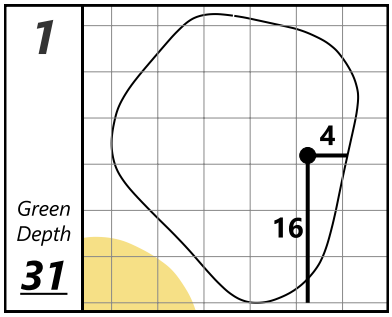

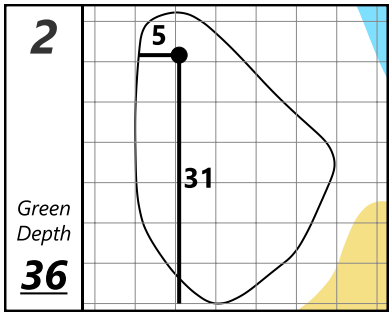

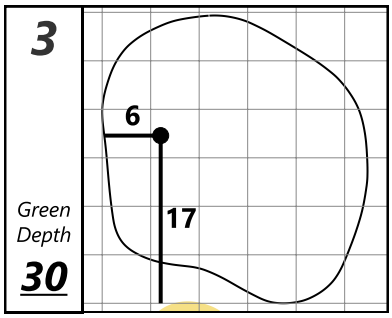

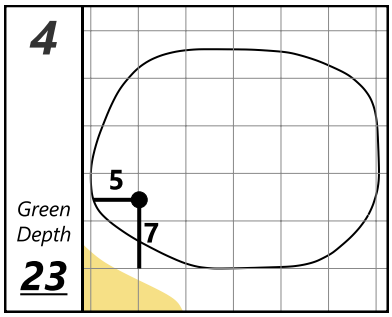

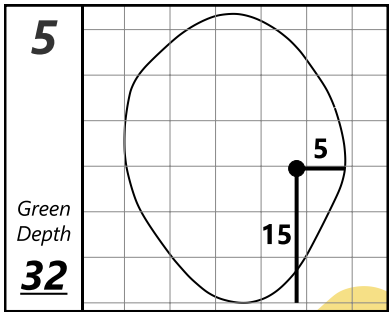

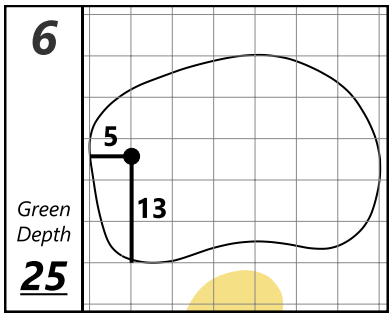

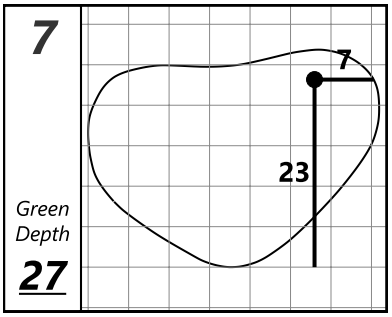

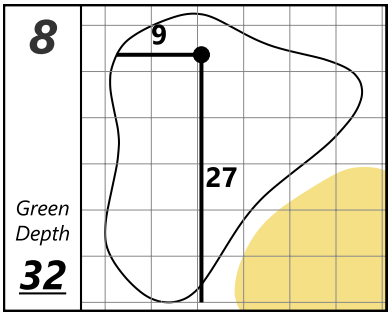

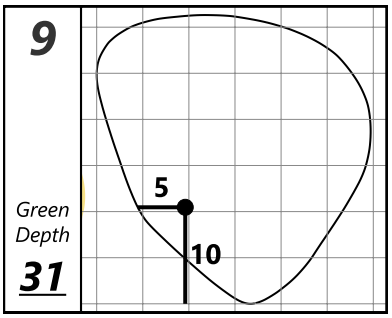

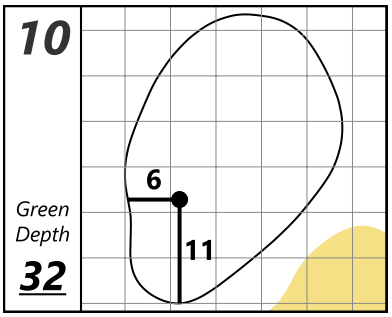

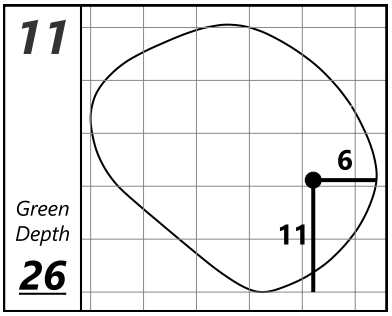

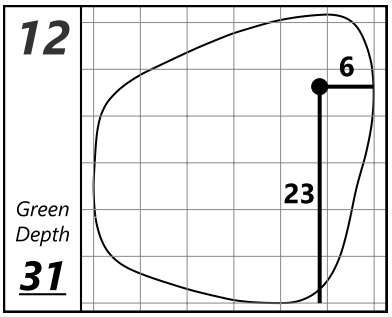

Sea Island Golf Club (Seaside Course)

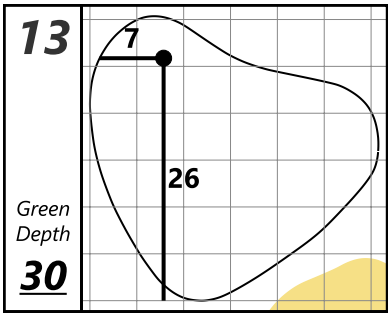

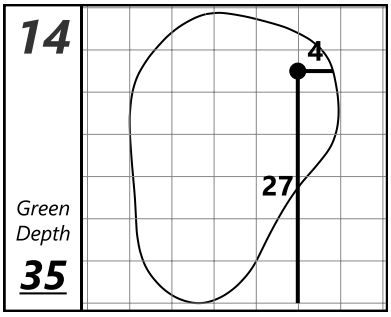

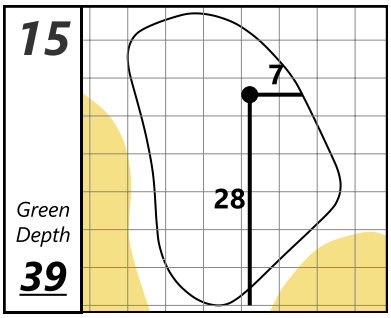

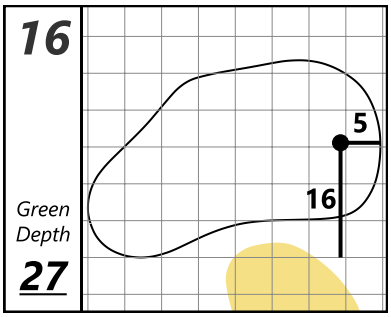

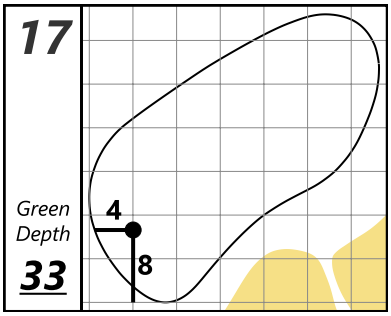

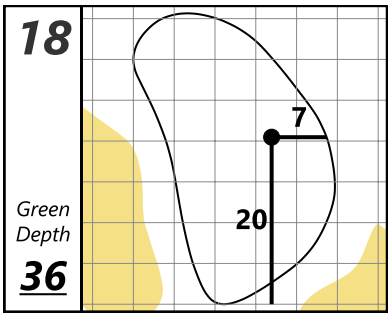

Each side of a complete square on the green represents 5 YARDS

Wednesday, November 20, 2024 8:51 AM